# BARESLAN S.L. Unipersonal & AUSPOLA S. COOP

## Access covers

# TECHNICAL DATACARD

## ROUND 600 COVER

### ARTICLE CODE: R600RG/F

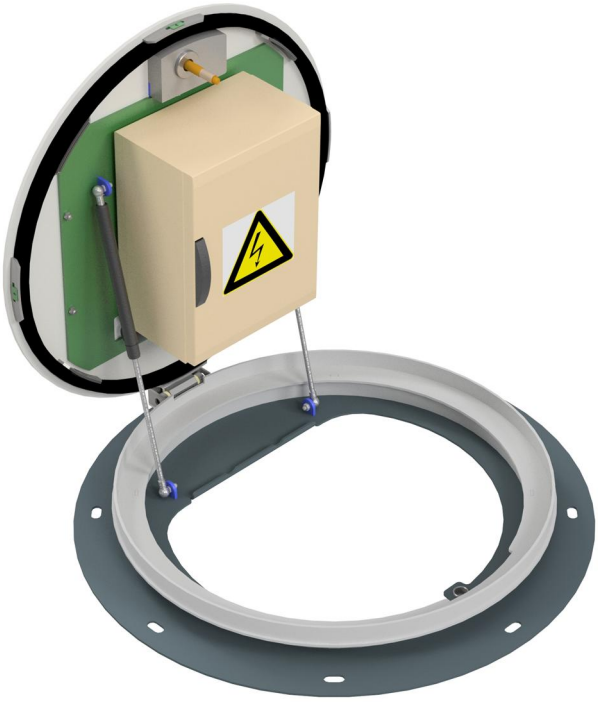

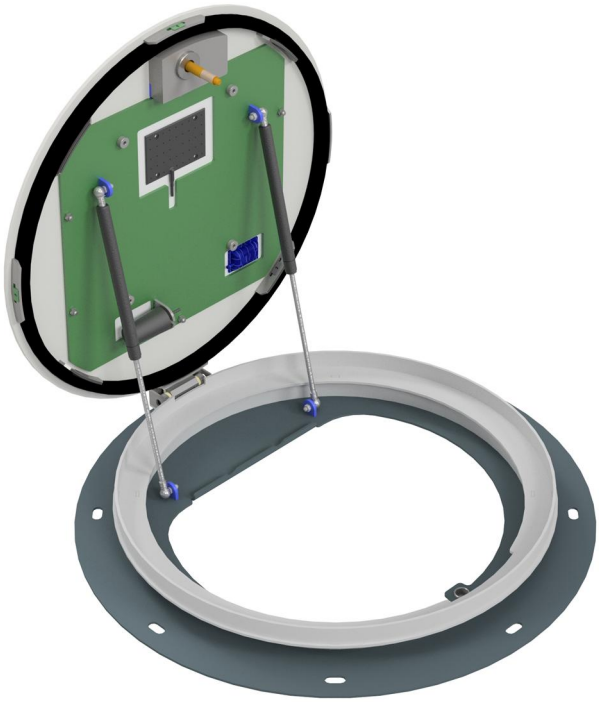

| Ø EXTERIOR. | HEIGHT | ESTIMATED WEIGHT | FREE WIDE PASS |
|---|---|---|---|
| Ø940 | 84 | 68 Kg | Ø600 |

| |
|---|
| WATER-TIGHT. |
| MADE OF CARBON STEEL S275JR/1.0044 TREATMENT ZINC Cr + III + SEALING. / CORROSION CATEGORY C4. |
| SAFETY LOCK SCREW IN ALUMINUM BRONZE WITH LOCK BOX |
| TOP COVER SLIP EMBOSSED SHEET |
| ADDITIONAL HELP FOR OPENING AND CLOSING BY A GAS ASSISTED SPRING DAMPERS. |
| PRE-INSTALLATION AND SUPPLY OF ELECTRICAL CABINET MODEL PNZ-43 (IP-65) |
| TOP COVER WITH INSTALLED PHOTOVOLTAIC PANEL (NEXT PAGE) |
| OPTIONS: |
| SUPPLY LOCK MODEL PL340 |
| SUPPLY INFORMATION TRANSMISION ANTENNA |
| ADAPTED TO CUSTOMERS REQUEST. (LOGOS AND DISTINCTIVE) |

(*) DESIGNED AND MANUFACTURED ACCORDING TO STANDARD UNE EN 124 (NOT CERTIFIED).

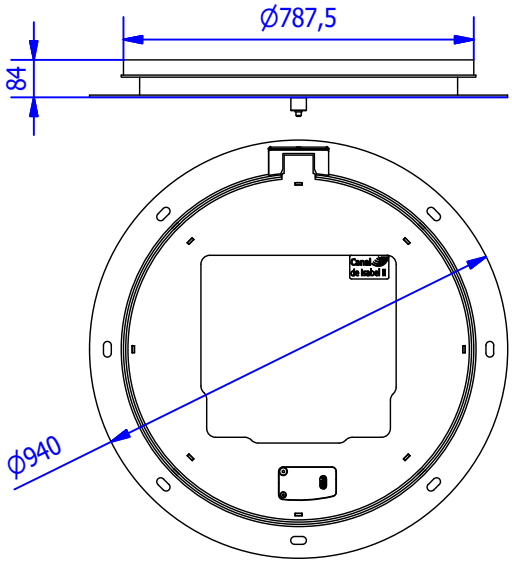


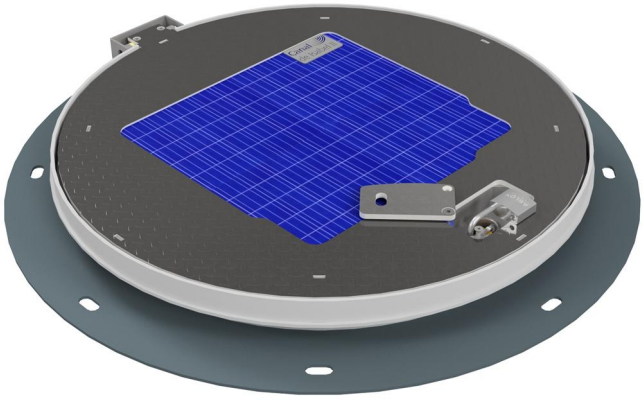

Approx. weight 68 kg.

# BARESLAN S.L. Unipersonal & AUSPOLA S. COOP

## Access covers

# TECHNICAL DATACARD

## PHOTOVOLTAIC GLASS
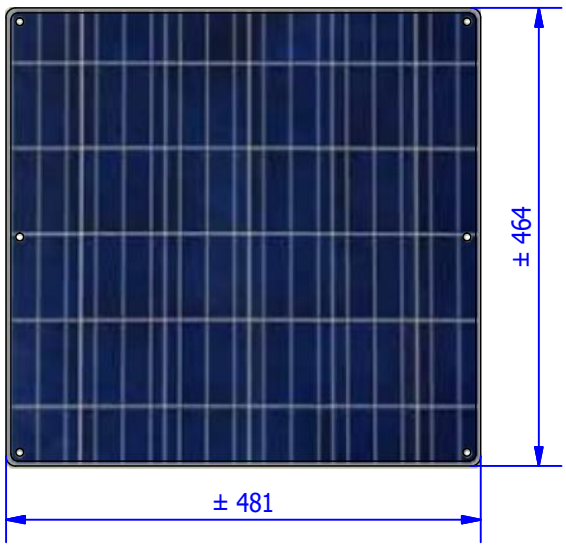
| PERFORMANCE AT STC* | |
|---|---|
| Electrical data for test conditions (STC) | |
| Rated output (Pmpp) Wp | 27 |
| Short-circuit current (Isc) A | 1,29 |
| Open circuit voltage (Uoc) V | 26,5 |
| Voltage (Umpp) V | 22,34 |
| Current (Impp) A | 1,22 |
| Afficiency unit % | 13,3 |
| STC: 1000 w/m2,AM 1.5 and a cell temperature of 25°C , stabilized module state. | |
| | |
| Dimensiones and weight | |
| Dimensions mm | 464 x 481 x 5 |
| Weight kg | 1,7 |
| Cell dimensions mm | 104 x 35 |
| | |
| Thermal properties | |
| System voltage | 24 |
| Reverse current carrying capacity IR | 12 A |
| Measuring accuracy Pmpp at STC | ± 5 % |
| Thickness | 3 mm |
| | |
| Materials | |
| Cell technology | mono and poly crystalline |
| Front side/back side | extremely resistant protective Nowoflon film on front and back, sealed all along the edge |
| Cable outlet | Small, flat, robust, sealed, screwed seawaterproof cable outlet |